03 21826 Autumn 2025
LH The Life and Death of Stars

Lecture 7

(JCD 5.1 - 5.2)

Annelies Mortier - office PW G35 - a.mortier@bham.ac.uk

UNIVERSITY OF BIRMINGHAM

Previous lecture

- Gravitational potential energy:

$$\Omega = -3 \int_0^{R_*} 4\pi r^2 \, P(r) \, dr = -3 \int_0^{M_*} \frac{P}{\rho} \, dm$$

- Virial theorem relates the total internal thermal energy (U) with the total potential energy of a star (Ω).
- Non-relativistic: $\Omega = -2\,U$
- Relativistic: $\Omega = -\,U$ (total energy is zero)
- Simple stellar models include
  - Density known function of radius
  - Isothermal atmospheres
  - Polytropic models. This leads to the Lane-Emden equation

Slido

Join SLIDO - #3790560

Outline

Energy transport

Local Thermodynamic Equilibrium

Radiative energy transport

Summary

Outline

Energy transport

Local Thermodynamic Equilibrium

Radiative energy transport

Summary

Energy transport

Energy has to be transported from the interior to the surface of a star. Essentially three mechanisms:

- Radiation, i.e. radiative transfer, i.e. via photons
- Convection, i.e. hot rising gas and cool falling gas i.e. via particles
- Conduction, i.e. via particle collisions
  $\rightarrow$ Not significant for most stars, except white dwarfs

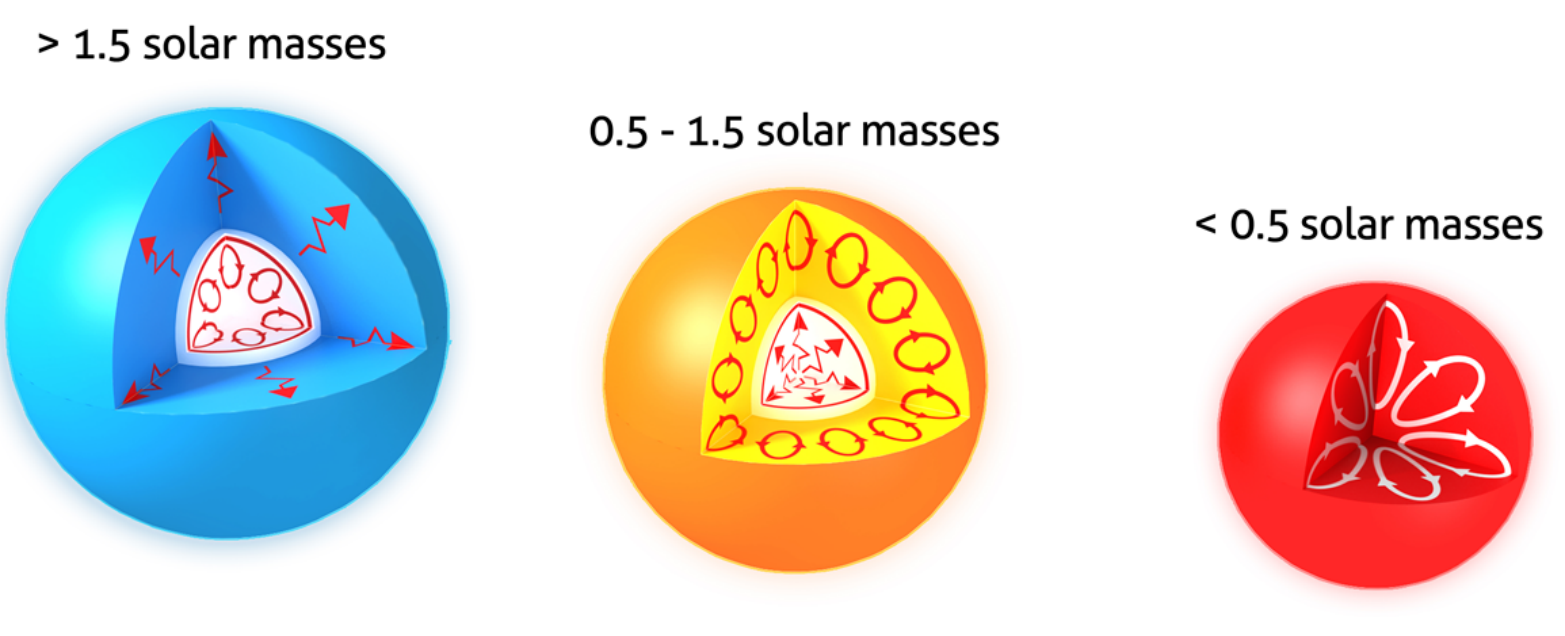

Outline

Energy transport

Local Thermodynamic Equilibrium

Radiative energy transport

Summary

Local Thermodynamic Equilibrium

- The complete treatment of energy transport by radiation is a current topic of research
- Complete treatment can be avoided in some cases, including the stellar interior.
- If the typical distance moved by a particle (mean free path) is small compared to the distance over which the temperature changes significantly (scale height), we can assume and use single properties to describe the gas - P, T, ...
- We call this Local Thermodynamic Equilibrium - LTE

Photon mean free path

- The intensity $I_\nu(s)$ of a beam of photons (with energy $h\,\nu$) that traveled a distance s, through an absorbing medium of density ρ and an opacity κ_ν [see more next lecture] is

$$I_\nu(s) = I_{\nu,0}\, e^{-\kappa_\nu\, \rho\, s}$$

- Definition **photon mean free path** λ: The distance a photon travels so the intensity decreases by $1/e$. Hence (show!):

$$\lambda = \frac{1}{\kappa_\nu\, \rho}$$

- Interpretation: it is the average distance between interactions (such as scattering, absoption, ...)
- Example: mean free path in Solar core: $\sim 0.1\,\mathrm{mm}$

Slido

Join SLIDO - #3790560

Outline

Energy transport

Local Thermodynamic Equilibrium

Radiative energy transport

Summary

Simple argument for energy transport via radiation

- Remember from Lecture 4: energy density of radiation is $u_R = a\,T^4$ with a the radiation constant
- Outer layers of star are cooler than the core (T decreases with increasing r)
- Hence energy density of radiation, u_R, decreases with increasing r
- Thus, on average, a photon moving away from the centre will carry more energy than a photon moving towards the centre
- This results in a net transport of energy towards the surface

Photon direction

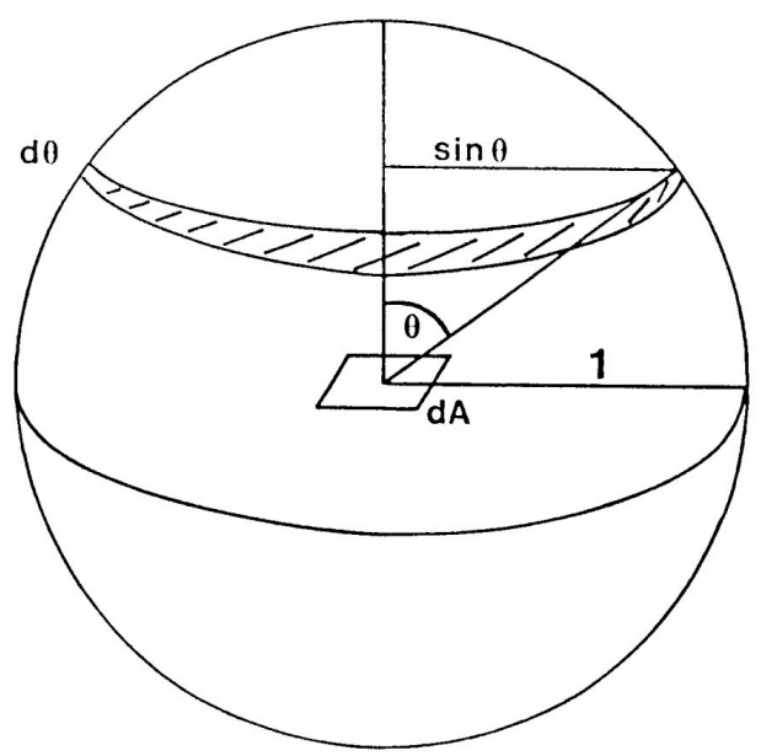

Figure credit: JCD

- Consider the energy transported in time interval dt through area dA
- dA orthogonal to direction of star centre and at $r = r_0$
- $\leftarrow$ direction of motion described by θ
- Assume isotropic motion
- Fraction of photons with directions between θ and $\theta + d\theta$:

$$\frac{1}{2} \sin\theta \, d\theta$$

Photon origin

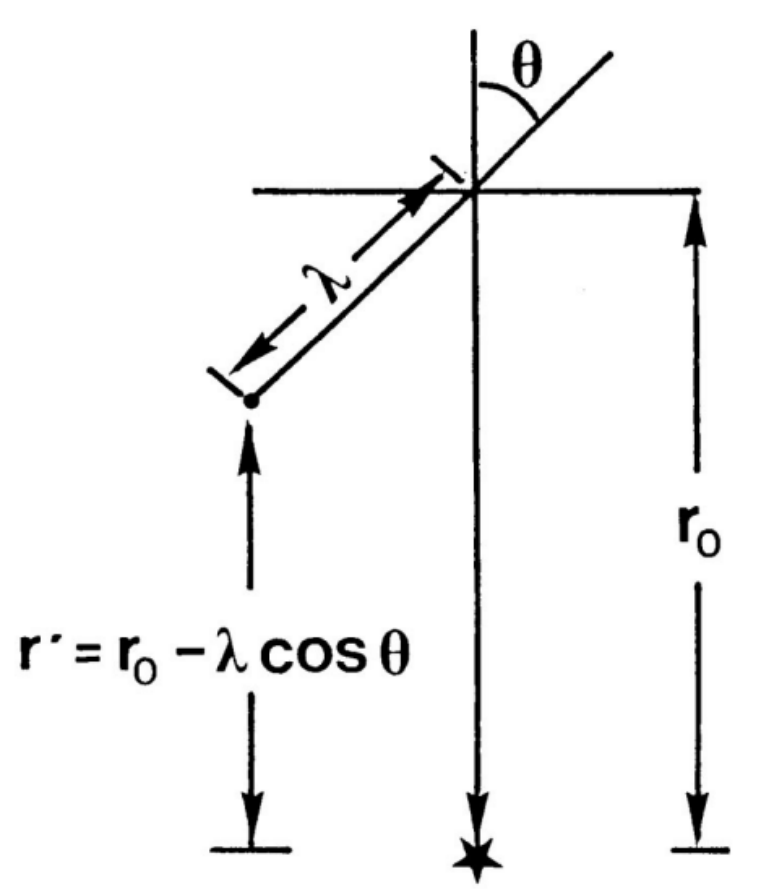

Figure credit: JCD

- Consider the photons passing through the plane at $r = r_0$ at a direction angle θ. Where did they on average originate ($r = r'$)?
- Remember the definition / interpretation of the mean free path
- Origin: $r' = r_0 - \lambda \cos\theta$
- Original photons come from region with energy density $u_R(r')$

Energy transport

- The contribution of the photons originating at $r = r'$ with angles between θ and $\theta + d\theta$ to the energy transport through dA in time dt:

$$dE_\theta = \frac{1}{2} \sin\theta \, d\theta \, u_R(r_0 - \lambda \cos\theta) \quad \times \quad \cos\theta \, dA \quad \times \quad c \, dt$$

- Total energy through dA in dt:

$$dE = \int_0^\pi dE_\theta \, d\theta \simeq -\frac{\lambda c}{3} \frac{du_R}{dr} \, dA \, dt$$

- Note that energy transport is thus only determined by the **change** in energy density and not the energy density at each point

Temperature gradient

- Define radiative flux, F_R, as $dE = F_R \, dA \, dt$
- Express mean free path with opacity and density
- Remember that $u_R = a \, T^4$
- We find that

$$F_R = -\frac{4 \, a \, c \, T^3}{3 \, \kappa \rho} \frac{dT}{dr}$$

- If energy transport happens only through radiation, then the luminosity $L_R(r)$ from this energy transport through a sphere of radius r is $L_R(r) = 4\pi \, r^2 \, F(r)$
- We get another fundamental equation - the equation of radiative energy transport:

$$\boxed{\frac{dT}{dr} = -\frac{3 \, \kappa \rho \, L(r)}{16\pi \, a \, c \, r^2 \, T^3}}$$

Close approximation - exercise

Consider a thin shell (between r and $r + dr$) in the stellar interior

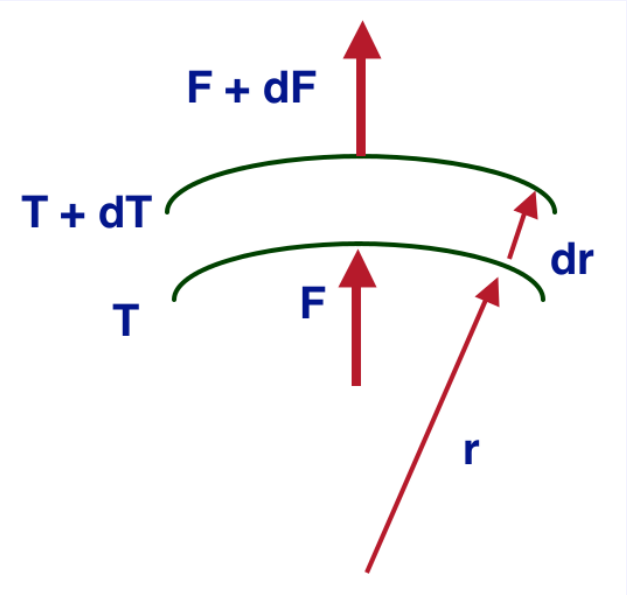

- Flux absorbed by the shell is $dF = -\kappa(r)\,\rho(r)\,F(r)\,dr$
- Also estimate dF assuming black-body temperature and flux ($F = \sigma\,T^4$) - remember that $4\sigma = a\,c$
- Get a close approximation of $\frac{dT}{dr}$

Summary

- Energy transported by radiation, convection or conduction
- Assume Local Thermodynamic Equilibrium in stellar interior
- Equation of radiative transport:

$$\boxed{\frac{dT}{dr} = -\frac{3\,\kappa\rho\,L(r)}{16\pi\,a\,c\,r^2\,T^3}}$$

NEXT LECTURE: Opacity, the energy equation